CITRAWEB SOLUSI TEKNOLOGI
www.citraweb.com
info@citraweb.com
sales@citraweb.com

Array Sector Antennas 2.4GHz - 14dBi RF ELEMENTS



Kode : AS-2-14
Brand : RF elements
Jenis : Wireless Antenna
Harga : Rp 1.660.000,00
~~Rp 1.985.000,00~~

Premium sector antennas with integrated BackShield™ and extremely wide bandwidth. BackShield™ is our patented frequency-selective surface that effectively attenuates back radiation and the side lobes in the azimuthal plane. BackShield™ is integrated into the antenna structure so there is no need for aftermarket accessory shields. The new Array Sector series are superior patch array antennas optimized for excellent performance in sectorial coverage and dense cluster applications.

Penawaran Harga Spesial
08112039555

Introducing The New Array Sector
The new Array Sector series are superior patch array antennas optimized for excellent performance in sectorial coverage and dense cluster applications.

www.citraweb.com



www.citraweb.com

Best in Class Performance

Gain stability across spectrum

RF elements® Array Sector Antenna has optimized gain performance in the whole useful bandwidth. Thanks to stable gain, the antenna delivers excellent performance in 2 GHz unlicensed band.

BackShieldTM for cluster deployments

Array Sector Antenna has integrated BackShield™ - our patented frequency-selective surfaces suppressing azimuthal side lobes and back radiation, improving its co-location capability.

Light & Compact

Array Sector Antenna is made of high grade aluminium that makes it compact, light, and extremely durable.

Stable Gain Across The Band

The gain of Array Sector antennas remains very stable across the whole useful frequency band. VSWR values are excellent across the whole useful spectrum for maximum power delivered from a radio to the antenna.

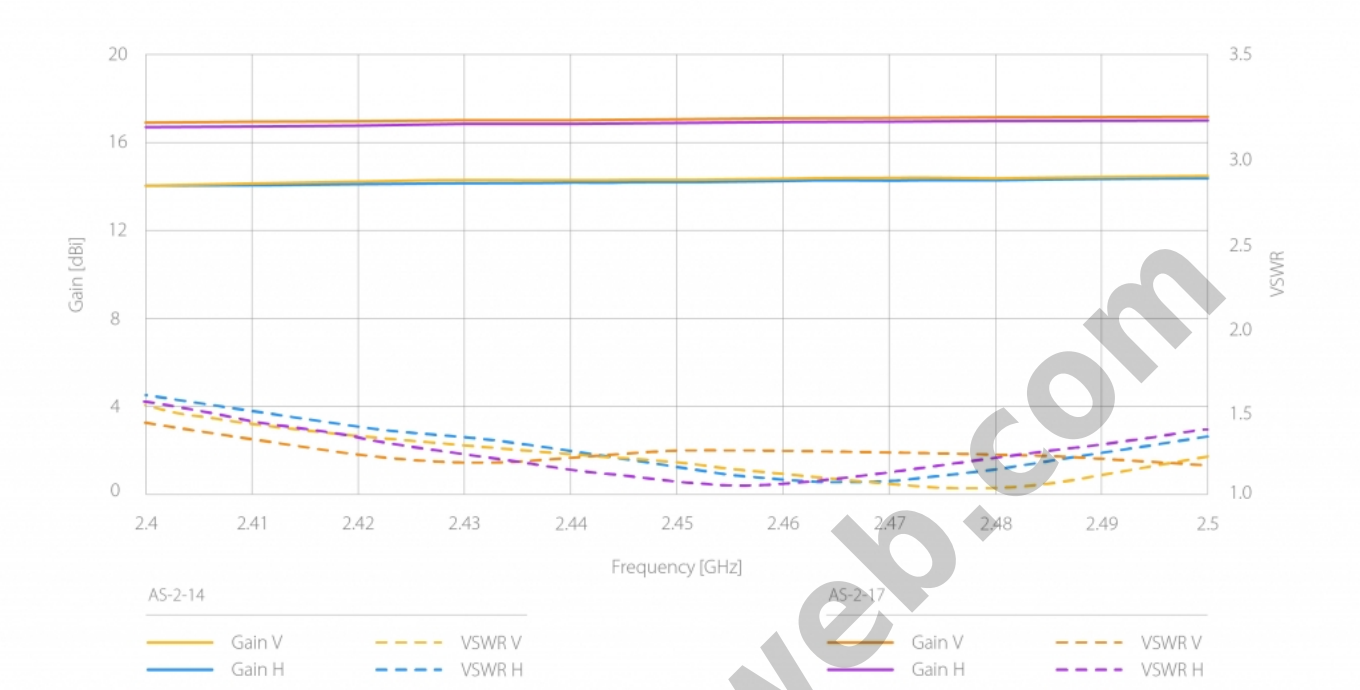

Optimized For Co-Location

BackShield™ is our patented frequency selective surface suppressing back radiation and sidelobes in azimuthal plane by mitigating parasitic surface waves. Backshield™ improves co-location capability of Array Sector Antenna in dense cluster deployments.

www.citraweb.com

CITRAWEB SOLUSI TEKNOLOGI
www.citraweb.com
info@citraweb.com
sales@citraweb.com

www.citraweb.com

CITRAWEB SOLUSI TEKNOLOGI
www.citraweb.com
info@citraweb.com
sales@citraweb.com

www.citraweb.com

CITRAWEB SOLUSI TEKNOLOGI
www.citraweb.com
info@citraweb.com
sales@citraweb.com

www.citraweb.com

CITRAWEB SOLUSI TEKNOLOGI
www.citraweb.com
info@citraweb.com
sales@citraweb.com

www.citraweb.com

www.citraweb.com

BackShieldTM

To suppress back radiation and side lobes in azimuth plane, we integrated our patented BackShield™ directly into antenna body. BackShield™ is a frequency-selective surface on which the antenna PCB is attached, so you do not need to spend more money for aftermarket accessory shields.

Wide Platform Compatibility

Array Sector Antenna bracket is compatible with radios of major brands in the WISP industry that have coaxial connectors at the output (check datasheet for a complete list). Detachable radio cover protests the SMA connectors from weather influences, a standard introduced by RF elements®.

New Antenna Bracket

The bracket of Array Sector is an innovative mounting system made of high quality materials and emphasis on minimum amount of parts, simple & quick assembly, alignment, and installation. The black color of the stainless steel hardware protects the bolts from seizing.

CITRAWEB SOLUSI TEKNOLOGI
www.citraweb.com
info@citraweb.com
sales@citraweb.com

Antenna Connection	2x RP-SMA on integrated semi-flex pigtails
Antenna Type	Patch Array Sector
Materials	UV Resistant ABS Plastic, Aluminium Alloy, Stainless Steel
Flame Rating	IP55
Temperature	-35°C to +60°C (-31°F to +140°F)
Wind Survival	160 km/h
Wind Loading	160 N at 160 km/hour
Electrical Downtilt	0°
Pole Mounting Diameter	40-80 mm (recommend as close to 80 mm as possible)
Weight	3.7 kg / 8.1 lbs – single unit
	4.0 kg / 8.8 lbs – single unit incl. package
Single Unit	Retail Box: 834 x 167 x 130 mm / 32.8 x 6.5 x 5.1 inch
Frequency Range	2400 - 2484 MHz
Gain	14 dBi
Polarization	Dual Linear H + V
Azimuth Beam Width -3 dB	H 71° / V 80°
Elevation Beam Width -3 dB	H 15° / V 15°
Azimuth Beam Width -6 dB	H 112° / V 112°
Elevation Beam Width -6 dB	H 21° / V 21°
Front-to-Back Ratio (Min)	21 dB
Beam Efficiency*	88%
Cross Pol Isolation	H 30 dB / V 30 dB
VSWR Max	1.6
VSWR Typical	1.4
Isolation Between Ports	35 dB
COMPATIBLE WIRELESS PLATFORMS	
RF elements®	StationBox® S, StationBox® S CARRIER CLASS, RockShield™
Cambium Networks™	ePMP™ 1000AP and CSM*1
MikroTik™	BaseBox*2, NetMetal*2

www.citraweb.com

Ubiquiti Networks™	Rocket™ M2, Rocket™ 2ac Prism
TP-Link	Pharos WBS210

*1with EasyBracket™ for ePMP™

*2with EasyBracket™ 912

www.citraweb.com

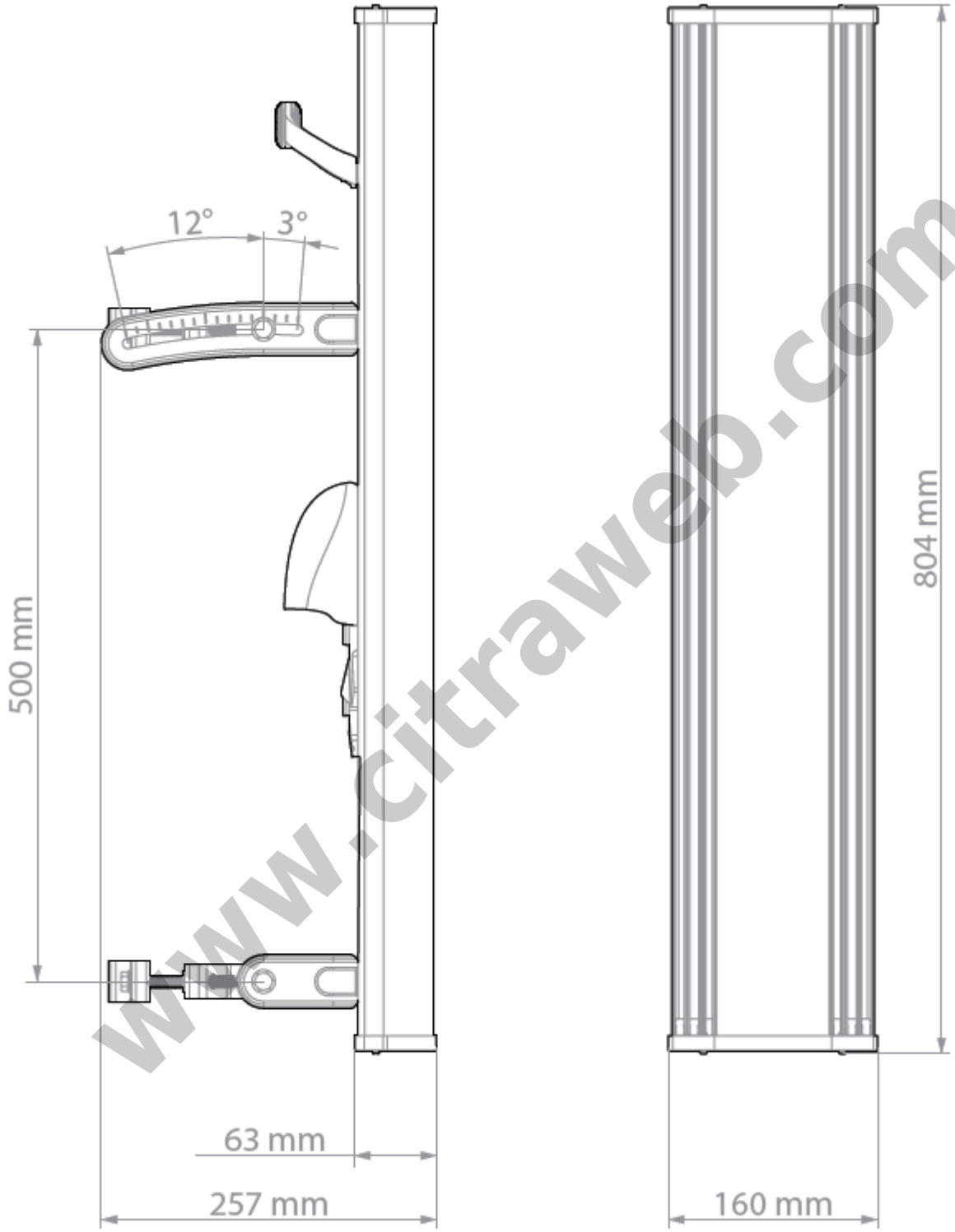

www.citraweb.com

[Download DataSheet]

Download UserGuide

www.citraweb.com

CITRAWEB SOLUSI TEKNOLOGI
www.citraweb.com
info@citraweb.com
sales@citraweb.com

www.citraweb.com

** Harga, spesifikasi, dan ketersediaan bisa berubah dan tidak mengikat*

URL : https://www.citraweb.com/produk/905/

Informasi lebih lanjut, pemesanan dan pembelian, hubungi: 0274-554444 atau email sales@citraweb.com

www.citraweb.com